www.howden.com

Howden

Roots* Universal RAI*, URAI-DSL, URAI-G* & Metric Series

Installation Operation & Maintenance Manual

Revolving Around You™

Contents

Information Summary.....2
Safety Precautions.....3
Operating Limit.....3
Installation.....4-6
Technical Supplement for URAI-G blowers 8
Lubrication.....8-9
Operation.....10
Troubleshooting.....11
Inspection & Maintenance.....12
Figures.....13-16
Tables.....16-17
Assembly Drawings.....18-23
Parts List.....24-25
Basic Connection & Drive Shaft Information...26-28

Do these things to get the most from your Roots™ Blower

- Check shipment for damage. If found, file claim with carrier and notify Howden Roots.
- Unpack shipment carefully, and check contents against Packing List. Notify Howden Roots if a shortage appears.
- Store in a clean, dry location until ready for installation. Lift by methods discussed under INSTALLATION to avoid straining or distorting the equipment. Keep covers on all openings. Protect against weather and corrosion if outdoor storage is necessary.
- Read OPERATING LIMITATIONS and INSTALLATION sections in this manual and plan the complete installation.
- Provide for adequate safeguards against accidents to persons working on or near the equipment during both installation and operation. See SAFETY PRECAUTIONS.
- Install all equipment correctly. Foundation design must be adequate and piping carefully done. Use recommended accessories for operating protection.
- **Make sure both driving and driven equipment is correctly lubricated before start-up. See LUBRICATION.**
- Read starting check points under OPERATION. Run equipment briefly to check for installation errors and make corrections. Follow with a trial run under normal operating conditions.
- In event of trouble during installation or operation, do not attempt repairs of Howden Roots furnished equipment. Notify Howden Roots, giving all nameplate information plus an outline of operating conditions and a description of the trouble. Unauthorized attempts at equipment repair may void Howden Roots warranty.
- Units out of warranty may be repaired or adjusted by the owner. Good inspection and maintenance practices should reduce the need for repairs.

NOTE: Information in this manual is correct as of the date of publication. Howden Roots reserves the right to make design or material changes without notice, and without obligation to make similar changes on equipment of prior manufacture.

Roots products are sold subject to the current General Terms of Sale, ES104 and Warranty Policy WP-5020. Copies are available upon request.

Safety Precautions

It is important that all personnel observe safety precautions to minimize the chances of injury. Among many considerations, the following should be particularly noted:

- Blower casing and associated piping or accessories may become hot enough to cause major skin burns on contact.
- Internal and external rotating parts of the blower and driving equipment can produce serious physical injuries. Do not reach into any opening in the blower while it is operating, or while subject to accidental starting. Protect external moving parts with adequate guards.
- Disconnect power before doing any work, and avoid bypassing or rendering inoperative any safety or protective devices.
- If blower is operated with piping disconnected, place a strong coarse screen over the inlet and avoid standing in the discharge air stream.

CAUTION: Never cover the blower inlet with your hand or other part of body.

- Stay clear of the blast from pressure relief valves and the suction area of vacuum relief valves.
- Use proper care and good procedures in handling, lifting, installing, operating and maintaining the equipment.
- Casing pressure must not exceed 25 PSI (1725 mbar) gauge. Do not pressurize vented cavities from an external source, nor restrict the vents without first consulting Roots.
- Do not use air blowers on explosive or hazardous gases.
- Other potential hazards to safety may also be associated with operation of this equipment. All personnel working in or passing through the area should be trained to exercise adequate general safety precautions.

Operating Limitations

A Roots blower or exhauster must be operated within certain approved limiting conditions to enable continued satisfactory performance. Warranty is contingent on such operation.

Maximum limits for pressure, temperature and speed are specified in Table 1 for various models & sizes of blowers and exhausters. These limits apply to all units of normal construction, when operated under standard atmospheric conditions. Be sure to arrange connections or taps for instruments, thermometers and pressure or vacuum gauges at or near the inlet and discharge connections of the unit. These, along with a tachometer, will enable periodic checks of operating conditions.

PRESSURE – The pressure rise, between inlet and discharge, must not exceed the figure listed for the specific unit frame size concerned. Also, in any system where the unit inlet is at a positive pressure above atmosphere a maximum case rating of 25 PSI gauge (1725 mbar) should not be exceeded without first consulting Roots. Never should the maximum allowable differential pressure be exceeded.

On vacuum service, with the discharge to atmospheric pressure, the inlet suction or vacuum must not be greater than values listed for the specific frame size.

TEMPERATURE – Blower & exhauster frame sizes are approved only for installations where the following temperature limitations can be maintained in service:

- Measured temperature rise must not exceed listed values when the inlet is at ambient temperature. Ambient is considered as the general temperature of the space around the unit. This is not outdoor temperature unless the unit is installed outdoors.
- If inlet temperature is higher than ambient, the listed allowable temperature rise values must be reduced by 2/3 of the difference between the actual measured inlet temperature and the ambient temperature.
- The average of the inlet and discharge temperature must not exceed 250°F. (121°C).
- The ambient temperature of the space the blower/motor is installed in should not be higher than 120°F (48.8°C).

SPEED – These blowers & exhausters may be operated at speeds up to the maximum listed for the various frame sizes. They may be direct coupled to suitable constant speed drivers if pressure/temperature conditions are also within limits. At low speeds, excessive temperature rise may be a limiting factor

Special Note: The listed maximum allowable temperature rise for any particular blower & exhauster may occur well before its maximum pressure or vacuum rating is reached. This may occur at high altitude, low vacuum or at very low speed. The units' operating limit is always determined by the maximum rating reached first. It can be any one of the three: Pressure, Temperature or Speed.

Installation

Roots blowers & exhausters are treated after factory assembly to protect against normal atmospheric corrosion. The maximum period of internal protection is considered to be one year under average conditions, if shipping plugs and seals are not removed. Protection against chemical or salt water atmosphere is not provided. Avoid opening the unit until ready to start installation, as corrosion protection will be quickly lost due to evaporation.

If there is to be an extended period between installation and start up, the following steps should be taken to ensure corrosion protection.

- Coat internals of cylinder, gearbox and drive end bearing reservoir with Nox-Rust VCI-10 or equivalent. Repeat once a year or as conditions may require. Nox-Rust VCI-10 is petroleum soluble and does not have to be removed before lubricating. It may be obtained from Daubert Chemical Co., 2000 Spring Rd., Oak Brook, Ill. 60521.
- Paint shaft extension, inlet and discharge flanges, and all other exposed surfaces with Nox-Rust X-110 or equivalent.
- Seal inlet, discharge, and vent openings. It is not recommended that the unit be set in place, piped to the system, and allowed to remain idle for extended periods. If any part is left open to the atmosphere, the Nox-Rust VCI-10 vapor will escape and lose its effectiveness.
- Protect units from excessive vibration during storage.
- Rotate shaft three or four revolutions every two weeks.
- Prior to start up, remove flange covers on both inlet and discharge and inspect internals to insure absence of rust. Check all internal clearances. Also, at this time, remove gearbox and drive end bearing cover and inspect gear teeth and bearings for rust.

Because of the completely enclosed unit design, location of the installation is generally not a critical matter. A clean, dry and protected indoor location is preferred. However, an outdoor location will normally give satisfactory service. Important requirements are that the correct grade of lubricating oil be provided for expected operating temperatures, and that the unit be located so that routine checking and servicing can be performed conveniently. Proper care in locating driver and accessory equipment must also be considered.

Supervision of the installation by a Howden Roots Service Engineer is not usually required for these units. Workmen with experience in installing light to medium weight machinery should be able to produce satisfactory results. Handling of the equipment needs to be accomplished with care, and in compliance with safe practices. Unit mounting must be solid, without strain or twist, and air piping must be clean, accurately aligned and properly connected.

Bare-shaft Units: Two methods are used to handle a unit without base. One is to use lifting lugs bolted into the top of the unit headplates. Test them first for tightness and fractures by tapping with a hammer. In lifting, keep the direction of cable pull on these bolts as nearly vertical as possible. If lifting lugs are not available, lifting slings may be passed under the cylinder adjacent to the headplates. Either method prevents strain on the extended drive shaft.

Packaged Units: When the unit is furnished mounted on a baseplate, with or without a driver, use of lifting slings passing under the base flanges is required. Arrange these slings so that no strains are placed on the unit casing or mounting feet, or on any mounted accessory equipment. DO NOT use the lifting lugs in the top of the unit headplates.

Before starting the installation, remove plugs, covers or seals from unit inlet and discharge connections and inspect the interior completely for foreign material. If cleaning is required, finish by washing the cylinder, headplates and impeller thoroughly with an appropriate solvent. Turn the drive shaft by hand to make sure that the impellers turn freely at all points. Anti-rust compound on the connection flanges and drive shaft extension may also be removed at this time with the same solvent. Cover the flanges until ready to connect piping.

Mounting

Care will pay dividends when arranging the unit mounting. This is especially true when the unit is a “bare-shaft” unit furnished without a baseplate. The convenient procedure may be to mount such a unit directly on a floor or small concrete pad, but this generally produces the least satisfactory results. It definitely causes the most problems in levelling and alignment and may result in a “Soft Foot” condition. Correct soft foot before operation to avoid unnecessary loading on the casing and bearings. Direct use of building structural framing members is not recommended.

For blowers without a base, it is recommended that a well anchored and carefully levelled steel or cast iron mounting plate be provided. The plate should be at least 1 inch (25 mm) thick, with its top surface machined flat, and large enough to provide levelling areas at one side and one end after the unit is mounted. It should have properly sized studs or tapped holes located to match the unit foot drilling. Proper use of a high quality machinist’s level is necessary for adequate installation.

With the mounting plate in place and levelled, set the unit on it without bolting and check for rocking. If it is not solid, determine the total thickness of shims required under one foot to stop rocking. Place half of this under each of the diagonally-opposite short feet, and tighten the mounting studs or screws. Rotate the drive shaft to make sure the impellers turn freely. If the unit is to be direct coupled to a driving motor, consider the height of the motor shaft and the necessity for it to be aligned very accurately with the unit shaft. Best unit arrangement is directly bolted to the mounting plate while the driver is on shims of at least 1/8 inch (3mm) thickness. This allows adjustment of motor position in final shaft alignment by varying the shim thickness.

Aligning

When unit and driver are factory mounted on a common baseplate, the assembly will have been properly aligned and is to be treated as a unit for levelling purposes. Satisfactory installation can be obtained by setting the baseplate on a concrete slab that is rigid and free of vibration, and levelling the top of the base carefully in two directions so that it is free of twist. The slab must be provided with suitable anchor bolts. The use of grouting under and partly inside the levelled and shimmed base is recommended.

It is possible for a base-mounted assembly to become twisted during shipment, thus disturbing the original alignment. For this reason, make the following checks after the base has been levelled and bolted down. Disconnect the drive and rotate the unit shaft by hand. It should turn freely at all points. Loosen the unit foot hold-down screws and determine whether all feet are evenly in contact with the base. If not, insert shims as required and again check for free impeller rotation. Finally, if unit is direct coupled to the driver, check shaft and coupling alignment carefully and make any necessary corrections.

In planning the installation, and before setting the unit, consider how piping arrangements are dictated by the unit design and assembly. Drive shaft rotation must be established accordingly and is indicated by an arrow near the shaft.

Typical arrangement on vertical units has the drive shaft at the top with counterclockwise rotation and discharge to the left. Horizontal units are typically arranged with the drive shaft at the left with counterclockwise rotation and discharge down. See Figure 4 for other various unit arrangements and possible conversions.

When a unit is DIRECT COUPLED to its driver, the driver RPM must be selected or governed so as not to exceed the maximum speed rating of the unit. Refer to Table 1 for allowable speeds of various unit sizes.

A flexible type coupling should always be used to connect the driver and unit shafts.

When direct coupling a motor or engine to a blower you must insure there is sufficient gap between the coupling halves and the element to prevent thrust loading the blower bearings. When a motor, engine or blower is operated the shafts may expand axially. If the coupling is installed in such a manner that there is not enough room for expansion the blower shaft can be forced

back into the blower and cause the impeller to contact the gear end headplate resulting in damage to the blower. The two shafts must be in as near perfect alignment in all directions as possible, and the gap must be established with the motor armature on its electrical center if end-play exists. Coupling manufacturer's recommendations for maximum misalignment, although acceptable for the coupling, are normally too large to achieve smooth operation and maximum life of the blower.

The following requirements of a good installation are recommended. When selecting a coupling to be fitted to the blower shaft Howden Roots recommends a taper lock style coupling to insure proper contact with the blower shaft. If the coupling must have a straight bore the coupling halves must be fitted to the two shafts with a line to line thru .001" interference fit. Coupling halves must be warmed up per coupling manufacturer's recommendations. Maximum deviation in offset alignment of the shafts should not exceed .005" (.13 mm) total indicator reading, taken on the two coupling hubs. Maximum deviation from parallel of the inside coupling faces should not exceed .001" (.03 mm) when checked at six points around the coupling.

When a unit is BELT DRIVEN, the proper selection of sheave diameters will result in the required unit speed. When selecting a sheave to be fitted to the blower shaft Howden Roots recommends a taper lock style sheave to insure proper contact with the blower shaft. This flexibility can lead to operating temperature problems caused by unit speed being too low. Make sure the drive speed selected is within the allowable range for the specific unit size, as specified under Table 1.

Belt drive arrangements usually employ two or more V-belts running in grooved sheaves. Installation of the driver is less critical than for direct coupling, but its shaft must be level and parallel with the unit shaft. **The driver should be mounted on the inlet side of a vertical unit (horizontal piping) and on the side nearest to the shaft on a horizontal unit. SEE PAGE 6 - Acceptable**

Blower Drive Arrangement Options.

The driver must also be mounted on an adjustable base to permit installing, adjusting and removing the V-belts. To position the driver correctly, both sheaves need to be mounted on their shafts and the nominal shaft center distance known for the belt lengths to be used.

CAUTION: Drive couplings and sheaves (pulleys) should have an interference fit to the shaft of the blower (set screw types of attachment generally do not provide reliable service.) It is recommended that the drive coupling or sheave used have a taperlock style bushing which is properly sized to provide the correct interference fit required. Drive couplings, that require heating to fit on the blower shaft, should be installed per coupling manufacturer recommendations. A drive coupling or sheave should not be forced on to the shaft of the blower as this could affect internal clearances resulting in damage to the blower.

Engine drive applications often require special consideration to drive coupling selection to avoid harmful torsional vibrations. These vibrations may lead to blower damage if not dampened adequately. It is often necessary to install a fly-wheel and/or a torsionally soft elastic element coupling based on the engine manufacturer recommendations.

The driver sheave should also be mounted as close to its bearing as possible, and again should fit the shaft correctly. Position the driver on its adjustable base so that 2/3 of the total movement is available in the direction away from the unit, and mount the assembly so that the face of the sheave is accurately in line with

the unit sheave. This position minimizes belt wear, and allows sufficient adjustment for both installing and tightening the belts. After belts are installed, adjust their tension in accordance with the manufacturer's instructions. However, only enough tension should be applied to prevent slippage when the unit is operating under load. Excessive tightening can lead to early bearing concerns or shaft breakage.

Before operating the drive under power to check initial belt tension, first remove covers from the unit connections. Make sure the interior is still clean, and then rotate the shaft by hand. Place a coarse screen over the inlet connection to prevent anything being drawn into the unit while it is operating, and avoid standing in line with the discharge opening. Put oil in the sumps per instructions under **LUBRICATION**.

Piping

Before connecting piping, remove any remaining anti-rust compound from unit connections. Clean pipe should be no smaller than unit connections. In addition, make sure it is free of scale, cuttings, weld beads, or foreign material of any kind. To further guard against damage to the unit, especially when an inlet filter is not used, install a substantial screen of 16 mesh backed with hardware cloth at or near the inlet connections. Make provisions to clean this screen of collected debris after a few hours of operation. It should be removed when its usefulness has ended, as the wire will eventually deteriorate and small pieces going into the unit may cause serious damage.

Fig. 1 - Acceptable Blower Drive Arrangement Options

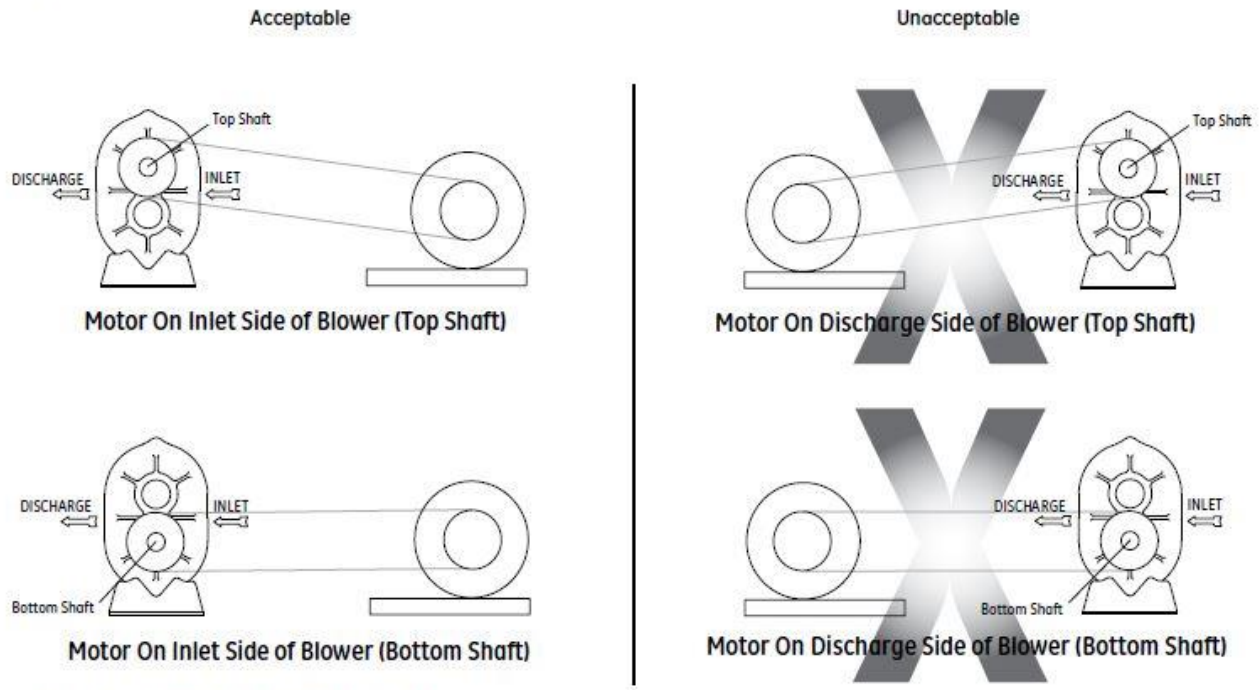

Above are suggested locations for available accessories.

Pipe flanges or male threads must meet the unit connections accurately and squarely. DO NOT attempt to correct misalignment by springing or cramping the pipe. In most cases this will distort the unit casing and cause impeller rubbing. In severe cases it can prevent operation or result in a broken drive shaft. For similar reasons, piping should be supported near the unit to eliminate dead weight strains. Also, if pipe expansion is likely to occur from temperature change, installation of flexible connectors or expansion joints is advisable.

Figure 3 represents an installation with all accessory items that might be required under various operating conditions. Inlet piping should be completely free of valves or other restrictions. When a shut-off valve cannot be avoided, make sure a full size vacuum relief is installed nearest the unit inlet. This will protect against unit overload caused by accidental closing of the shutoff valve.

Need for an inlet silencer will depend on unit speed and pressure, as well as sound-level requirements in the general surroundings. An inlet filter is recommended, especially in dusty or sandy locations. A discharge silencer is also normally suggested, even though WHISPAIR* units operate at generally lower noise levels than conventional rotary blowers. Specific recommendations on silencing can be obtained from your local Howden Roots distributor. Discharge piping requires a pressure relief valve, and should include a manual unloading valve to permit starting the unit under no-load conditions. Reliable pressure/vacuum gauges and good thermometers at both inlet and discharge are recommended to allow making the important checks on unit operating conditions. The back-pressure regulator shown in Figure 3 is useful mainly when volume demands vary while the unit operates at constant output. If demand is constant, but somewhat lower than the unit output, excess may be blown off through the manual unloading valve.

In multiple unit installations where two or more units operate with a common header, use of check valves is mandatory. These should be of a direct acting or free swinging type, with one valve located in each line between the unit and header. Properly installed, they will protect against damage from reverse rotation caused by air and material back-flow through an idle unit.

After piping is completed, and before applying power, rotate the drive shaft by hand again. If it does not move with uniform freedom, look for uneven mounting, piping strain, excessive belt tension or coupling misalignment.

DO NOT operate the unit at this time unless it has been lubricated per instructions.

Technical Supplement for URAI-G Gas Blowers

Technical Supplement for 32, 33, 36, 42, 45, 47, 53, 56, 59, 65, 68, 615 Universal RAI-G blowers

Precaution: URAI-G blowers: Care must be used when opening the head plate seal vent chamber plugs (43) as some gas will escape–if it is a pressure system, or the atmospheric air will leak into the blower if the system is under vacuum. There is a possibility of some gas leakage through the mechanical seals. This leakage on the gear end will escape through the gear box vent, and on the drive end, through the grease release fittings. If the gas leakage is undesirable, each seal chamber must be purged with an inert gas through one purge gas hole (43) per seal. There are two plugged purge gas holes (1/8 NPT) provided per seal. The purge gas pressure must be maintained one PSI above the discharge gas pressure. Also, there exists a possibility of gear end oil and drive end grease leakage into the gas stream.

Roots Universal RAI-G rotary positive gas blowers are a design extension of the basic Roots Universal RAI blower model. URAIG blower uses (4) mechanical seals in place of the standard inboard lip seals to minimize gas leakage into the atmosphere.

These units are intended for gases which are compatible with cast iron case material, steel shafts, 300/400 series stainless steel and carbon seal components, viton o-rings and the oil/ grease lubricants. If there are any questions regarding application or operation of this gas blower, please contact factory.

A simple but very effective lubrication system is employed on the drive shaft end bearings. Hydraulic pressure relief fittings are provided to vent any excess grease, preventing pressure build-up on the seals. A restriction plug and metering orifice prevent loss of lubricant from initial surges in lubricant pressure but permit venting excess lubricant under steadily rising pressures.

Using a pressure gun, slowly force new lubricant into each drive end bearing housing until traces of clean grease comes out of the relief fitting. The use of an electric or pneumatic grease gun could force the grease in too rapidly and thus invert the seals and should not be used.

Gear end bearings, gears and oil seals are lubricated by the action of the timing gears which dip into the main oil sumps causing oil to splash directly on gears and into bearings and seals. A drain port is provided below each bearing to prevent an excessive amount of oil in the bearings. Seals located inboard of the bearings in each headplate effectively retain oil within the sumps. Any small weepage that may occur should the seals wear passes into a cavity in each vented headplate and is drained downward.

Proper lubrication is usually the most important single consideration in obtaining maximum service life and satisfactory operation from the unit. Unless operating conditions are severe, a weekly check of oil level and necessary addition of lubricant should be sufficient.

During the first week of operation, check the oil levels in the oil sumps about once a day, and watch for leaks. Replenish as necessary. Thereafter, an occasional check should be sufficient.

More frequent oil service may be necessary if the blower is operated in a very dusty location.

Lubrication

Due to sludge build-up and seal leakage problems, Howden Roots recommendation is DO NOT USE Mobil SHC synthetic oils in Roots blowers.

Proper lubrication is usually the most important single consideration in obtaining maximum service life and satisfactory operation from the unit.

URAI Air and Gas gear end bearing lubrication/oil with splash lubrication on the gear end only (Drive end grease lubricated).

- The specified and recommended oil is Roots Synthetic Oil of correct viscosity per Table 2, page 16.
- To fill the gearbox, remove the breather plug (25) and the oil overflow plug (21) - see page 15. Fill the reservoir up to the overflow hole. **DO NOT OVERFILL**. Place the breather and the overflow plug back into their respective holes.
- The lubrication should be changed after initial 100 hours of operation.
- Proper service intervals of the oil thereafter are based on the discharge air temperature of the blower. Please refer to the information below to “How to properly determine the oil service intervals” shown on this page.
- Unless operating conditions are quite severe, a weekly check of the oil level and necessary addition of lubricant should be sufficient. During the first week of operation, check the oil levels in the oil sumps about once a day, and watch for leaks. Replenish as necessary.
- If you choose to use another oil other than the specified and recommended ROOTS Synthetic, use a good grade of industrial type non-detergent, rust inhibiting, anti-foaming oil and of correct viscosity per Table 2, page 16.

- Howden Roots does NOT recommend the use of automotive type lubricants, as they are not formulated with the properties mentioned above.

Roots URAI-DSL blowers with splash lubrication/oil on each end. No grease.

- The specified and recommended oil is Roots Synthetic Oil of correct viscosity per Table 2, page 16.
- The lubrication should be changed after initial 100 hours of operation.
- The proper oil level should be half way or middle of the sight gauge when the blower is not operating. **DO NOT OVERFILL OIL SUMP/S** as damage to the blower may occur.
- The oil level should not fall below the middle of the site gauge when the blower is idle.
- The lubrication/oil level may rise or fall in the gauge during operation to an extent depending somewhat on oil temperature and blower speed. Proper service intervals of the oil thereafter are based on the discharge air temperature of the blower. Please refer to the information below to "How to properly determine the oil service intervals" shown on this page.
- Unless operating conditions are quite severe, a weekly check of the oil level and necessary addition of lubricant should be sufficient. During the first week of operation, check the oil levels in the oil sumps about once a day, and watch for leaks. Replenish as necessary.
- If you choose to use another oil other than the specified and recommended Roots Synthetic Oil, use a good grade of **industrial type** non-detergent, rust inhibiting, antifoaming oil and of correct viscosity per Table 2, page 16.
- Roots does **NOT** recommend the use of automotive type lubricants, as they are not formulated with the properties mentioned above.

How to properly determine the oil service intervals.

Normal life expectancy of the specified and recommended Roots Synthetic Oil is approximately 6000 hours with an oil temperature of 180°F (82°C) or less. As the oil temperature increases by increments of 15°F (8°C), the oil life is reduced by half for each 15°F (8°C) increase. Example: Oil temperatures of 195°F (90.5°C) will produce a life expectancy reduced by half or 3000 hours oil service life.

Normal life expectancy of petroleum based oils is about 2000 hours with an oil temperature of about 180°F (82°C). As the oil temperature increases by increments of 15°F (8°C), the life is reduced by half for each 15°F (8°C) increase. Example: Oil temperatures of 195°F (90.5°C) will produce life expectancy reduced by half or 1000 hours oil service life.

NOTE: To estimate oil temperature, multiply the discharge temperature of the blower by 0.80. Example: if the discharge air temperature of the blower is 200° F, it is estimated that the oil temperature is 160° F

For Units with grease lubricated drive end bearings.

URAI AIR (Non GAS) blower grease specifications.

- When servicing drive end bearings of a AIR (Non Gas) blower, use the specified and recommended Shell Darina SD 2 NLGI #2 product code 5067628.
- For grease lubricated drive end blowers see page 16, table 4, regarding specified greasing intervals.
- Lithium based greases are not compatible with the specified and recommended Shell Darina SD 2 grease used when assembling the blower. **Lithium based grease is not approved for any ROOTS blowers.**
- Table 4 page 16 has been prepared as a general greasing schedule guide based on average operating conditions. More frequent intervals may be necessary depending on the grease operating temperature and unusual circumstances.

URAI-G blower grease specifications.

- When servicing drive end bearings of a URAI-G blower, use the specified NLGI #2 premium grade aluminium complex† grease, GE P/N T20019001. Lithium based greases are not compatible with the specified and recommended Roots Synthetic Grease used when assembling a GAS blower. **Lithium based grease is not approved for any Roots blowers.**
- The lubricants selected must be compatible with the gas.

†Roots Synthetic Oil is superior in performance to petroleum based products. It has high oxidation stability, excellent corrosion protection, extremely high film strength and low coefficient of friction. Typical oil change intervals are increased 2-3 times over petroleum based lubricants. Also, Roots Synthetic Oil is 100% compatible with petroleum based oils. Simply drain the oil in the blower and refill the reservoirs with Roots Synthetic Oil to maintain optimum performance of your Roots

Operation

Before operating a blower under power for the first time, recheck the unit and the installation thoroughly to reduce the likelihood of avoidable troubles. Use the following procedure check list as a guide, but consider any other special conditions in the installation.

- Be certain that no bolts, tools, rags, or debris have been left in the blower air chamber or piping.
- If an outdoor intake without filter is used, be sure the opening is located so it cannot pick up dirt and is protected by a strong screen or grille. Use of the temporary protective screen as described under INSTALLATION is strongly recommended.
- Recheck blower levelling, drive alignment and tightness of all mounting bolts if installation is not recent. If belt drive is used, adjust belt tension correctly.
- Turn drive shaft by hand to make sure impellers still rotate without bumping or rubbing at any point.
- Ensure oil levels in the main oil sumps are correct.
- Check lubrication of driver. If it is an electric motor, be sure that power is available and that electrical overload devices are installed and workable.
- Open the manual unloading valve in the discharge air line. If a valve is in the inlet piping, be sure it is open.
- Bump blower a few revolutions with driver to check that direction of rotation agrees with arrow near blower shaft, and that both coast freely to a stop.

After the preceding points are cleared, blower is ready for trial operation under “no-load” conditions. The following procedure is suggested to cover this initial operation test period.

a. Start blower, let it accelerate to full speed, then shut off. Listen for knocking sounds, both with power on and as speed slows down.

b. After blower comes to a complete stop, repeat above, but let blower run 2 or 3 minutes. Check for noises, such as knocking sounds.

c. After blower comes to a complete stop, operate blower for about 10 minutes unloaded. Check oil levels. Observe cylinder and headplate surfaces for development of hot spots such as burned paint, indicating impeller rubs. Be aware of any noticeable increase in vibration.

Assuming that all trials have been satisfactory, or that necessary corrections have been made, the blower should now have a final check run of at least one hour under normal operating conditions. After blower is restarted, gradually close the discharge unloading valve to apply working pressure.

At this point it is recommended that a pressure gauge or manometer be connected into the discharge line if not already provided, and that thermometers be in both inlet and discharge lines. Readings from these instruments will show whether pressure or temperature ratings of the blower are being exceeded.

During the final run, check operating conditions frequently and observe the oil levels at reasonable intervals. If excessive noise or local heating develops, shut down immediately and determine the cause. If either pressure rise or temperature rise across the blower exceeds the limit specified in this manual, shut down and investigate conditions in the piping system. Refer to the TROUBLESHOOTING CHECKLIST for suggestions on various problems that may appear.

The blower should now be ready for continuous duty operation at full load. During the first few days make periodic checks to determine whether all conditions remain steady, or at least acceptable. This may be particularly important if the blower is supplying air to a process system where conditions can vary. At the first opportunity, stop the blower and clean the temporary inlet protective screen. If no appreciable amount of debris has collected, the screen may be removed. See comments under INSTALLATION. At this same time, verify levelling, coupling alignment or belt tension, and mounting bolt tightness.

Should operating experience prove that blower capacity is a little too high for the actual air requirements, a small excess may be blown off continuously through the manual unloading or vent valve. Never rely on the pressure relief valve as an automatic vent. Such use may cause the discharge pressure to become excessive, and can also result in unsafe operation of the valve itself. If blower capacity appears to be too low, refer to the TROUBLESHOOTING CHECKLIST.

Vibration Assessment Criteria

With measurements taken at the bearing locations on the housings, see chart below for an appropriate assessment guide for rotary lobe blowers rigidly mounted on stiff foundations.

In general, blower vibration levels should be monitored on a regular basis and the vibration trend observed for progressive or sudden change in level. If such a change occurs, the cause should be determined through spectral analysis.

As shown on the chart below, the level of all pass vibration will determine the need to measure discrete frequency vibration levels and the action required.

All Pass Vibrations (in/sec)	Discrete Frequency Vibration (in/sec)	Action
0.45 or less	N/R	Acceptable
Greater than 0.45 but 1.0 or less	0.45 or less @ any frequency	Acceptable
	Greater than 0.45 @ any frequency	Investigate
Greater than 1.0	Less than 1.0	Investigate
	Greater than 1.0	Investigate

Troubleshooting Checklist

Trouble	Item	Possible Cause	Remedy
No flow	1	Speed too low	Check by tachometer and compare with published performance.
	2	Wrong rotation	Compare actual rotation with Figure 1, change driver if wrong.
	3	Obstruction in piping	Check piping, valves, silencer to assure open flow path.
Low capacity	4	Speed too low	See item 1, if belt drive, check for slippage and re-adjust tension.
	5	Excessive pressure rise	Check inlet vacuum and discharge pressure and compare with published performance.
	6	Obstruction in piping	See item 3.
	7	Excessive slip	Check inside of casing for worn or eroded surfaces causing excessive clearances
Excessive power	8	Speed too high	Check speed and compare with published performance.
	9	Excessvie pressure rise	See item 5
	10	Impeller rubbing	Inspect outside of cylinder for high temperature areas, then check for impeller contact at these points. Correct blower mounting, drive alignment.
	11	Scale , sludge, rust or product build up	Clean blower appropriately
Damage to bearings or gears	12	Inadequate lubrication	Check oil sump levels in gear and drive end headplates
	13	Excessive lubrication	Check oil levels. If correct, drain and refill with clean oil of recommended grade.
	14	Excessive pressure rise	See item 5.
	15	Coupling misalignment	Check carefully. Re-align if questionable.
	16	Excessive belt tension	Re-adjust for correct tension.
Vibration	17	Misalignment	See item 15
	18	Impellers rubbing	See item 10
	19	Worn bearings/gears	Check gear backlash and conditions of bearings and replace as indicated.
	20	Unbalanced or rubbing impeller	Scale or process material may build up on casing and impellers, or inside impellers. Remove build-up to restore original clearances and impeller balance.
	21	Driver or blower loose	Tighten mounting bolts securely.
	22	Piping resonances	Determine whether standing wave pressure pulsations are present in the piping.
	23	Scale/sludge build-ups	Clean out interior of impeller lobes to restore dynamic balance.
Driver stops, or will not start	24	Casing strain	Re-work piping alignment to remove excess strain
	25	Impeller stuck	Check for excessive hot spot on headplate or cynlinder. See item 10. Look for defective shaft bearing and/or gear teeth.
	26	Scale, sludge, rust or product build-up	Clean blower appropiately
Excessive breather	27	Broken seal	Replace seals
Blow-by or excessive oil leakage to vent area	28	Defective O-ring	Replace seals and O-ring
Excessive oil leakage in vent area	29	Defective/plugged breather	Replace breather and monitor oil leakage
	30	Oil level too high	Check sump levels in gear and drive headplates
	31	Oil type or viscosity incorrect	Check oil to ensure it meets recommendations. Drain then fill with clean oil of recommended grade.
	32	Blower running hot	Check blower operating conditions to ensure they are within the operating limitations defined in this manual.

Inspection & Maintenance: Roots Universal RAI series blowers

A good program of consistent inspection and maintenance is the most reliable method of minimizing repairs to a blower. A simple record of services and dates will help keep this work on a regular schedule. Basic service needs are:

- Lubrication
- Checking for hot spots
- Checking for increases or changes in vibration and noise
- Recording of operating pressures and temperatures

Above all, a blower must be operated within its specified rating limits, to obtain satisfactory service life.

A newly installed blower should be checked often during the first month of full-time operation. Attention thereafter may be less frequent assuming satisfactory performance. Lubrication is normally the most important consideration and weekly checks of lubricant levels in the gearbox and bearing reservoirs should be customary. Complete oil change schedules are discussed under **LUBRICATION.**

Driver lubrication practices should be in accordance with the manufacturer's instructions. If direct connected to the blower through a lubricated type coupling, the coupling should be checked and greased each time blower oil is changed. This will help reduce wear and prevent unnecessary vibration. In a belted drive system, check belt tension periodically and inspect for frayed or cracked belts.

In a new, and properly installed, unit there is no contact between the two impellers, or between the impellers and cylinder or headplates. Wear is confined to the bearings (which support and locate the shafts) the oil seals, and the timing gears. All are lubricated and wear should be minimal if clean oil of the correct grade is always used. Seals are subject to deterioration as well as wear, and may require replacement at varying periods.

Shaft bearings are designed for optimum life under average conditions with proper lubrication and are critical to the service life of the blower. Gradual bearing wear may allow a shaft position to change slightly, until rubbing develops between impeller and casing. This will cause spot heating, which can be detected by observing these surfaces. Sudden bearing failure is usually more serious. Since the shaft and impeller are no longer supported and properly located, extensive general damage to the blower casing and gears is likely to occur.

Oil seals should be considered expendable items, to be replaced whenever drainage from the headplate vent cavity becomes excessive or when the blower is disassembled for any reason. Some oil seal leakage may occur since an oil film under the lip is required for proper operation. Periodically leaked oil should be wiped off from surfaces. Minor seal leakage should not be considered as indicating seal replacement.

Timing gear wear, when correct lubrication is maintained, should be negligible. Gear teeth are cut to provide the correct amount of backlash, and gears correctly mounted on the shafts will accommodate a normal amount of tooth wear without permitting contact between lobes of the two impellers. However, too high an oil level will cause churning and excessive heating. This is indicated by unusually high temperature at the bottom of the gear housing. Consequent heating of the gears will result in loss of tooth-clearance, backlash and rapid wear of the gear teeth usually will develop. Continuation of this tooth wear will eventually produce impeller contacts (knocking), and from this point serious damage will be unavoidable if blower operation is continued. A similar situation can be produced suddenly by gear tooth fracture, which is usually brought on by sustained overloading or momentary shock loads.

Problems may also develop from causes other than internal parts failure. Operating clearances within a blower are only a few thousandths of an inch. This makes it possible for impeller interference or casing rubs to result from shifts in the blower mounting or from changes in piping support. If this type of trouble is experienced, and the blower is found to be clean, try removing mounting strains. Loosen blower mounting bolts and reset the levelling and drive alignment. Then tighten mounting again, and make sure that all piping meets blower connections accurately and squarely Foreign materials in the blower will also cause trouble, which can only be cured by disconnecting the piping and thoroughly cleaning the blower interior.

A wide range of causes and solutions for operating troubles are covered in the **TROUBLE SHOOTING CHECKLIST.** The remedies suggested should be performed by qualified mechanics with a good background. Major repairs generally are to be considered beyond the scope of maintenance, and should be referred to an authorized Howden Roots distributor.

Warranty failures should not be repaired at all, unless specific approval has been obtained through Howden Roots before starting work. Unauthorized disassembly within the warranty period may void the warranty.

Figure 2 - Allowable Overhung Loads for V-belt Drives Roots Universal RAI/URAI-J Units

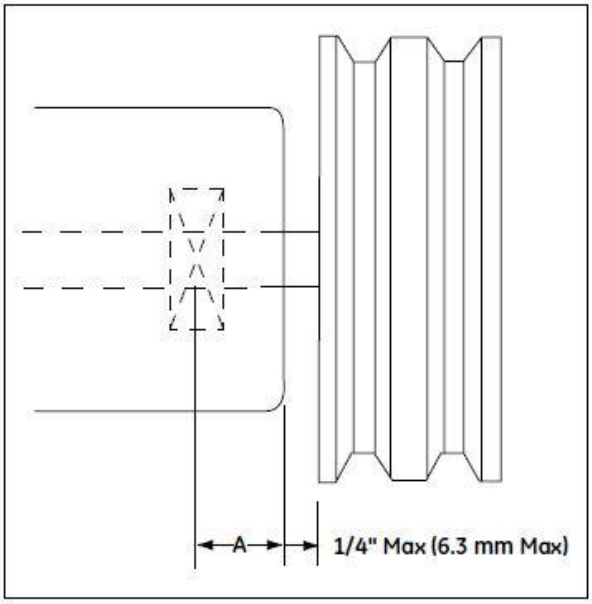

$$^{\dagger}\text{Belt Pull lbs} = \frac{252100 \bullet \text{Motor HP}}{\text{Blower RPM} \bullet \text{Sheave Diameter in Inches}}$$

$$\text{Shaft Load (lb.in)} = \text{Belt Pull} \bullet \left(\text{A}'' + \tfrac{1}{4}'' + \frac{\text{Sheave Width}(")}{2}\right)$$

†Based on SF = 1.4 for v-belt drives. If higher SF belt is used, belt load should be increased proportionally and may exceed limits of the blower.

Frame Size	Dim "A"	Max. Allow. Shaft Load (lb.in)	Min Sheave Diameter
22, 24	0.61	150	4.00
32, 33, 36	0.80	400	5.00
42, 45, 47	1.02	730	5.00
53, 56, 59	1.13	1,325	6.00
65, 68, 615	1.36	2,250	8.00
76, 711, 718	1.16	3000	9.50

NOTE:

Arc of sheave belt contact on the smaller sheave not to be less than 170°.

Driver to be installed on the inlet side for vertical units, and on the drive shaft side for horizontal units.

GE recommends the use of two or more 3VX, 5VX or 8VX belts and sheaves.

Acceptable Blower Drive Arrangement Options

Acceptable

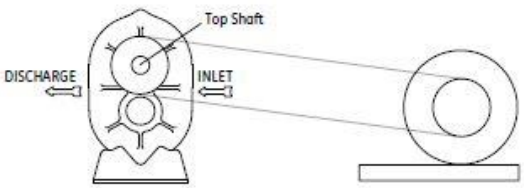

Motor On Inlet Side of Blower (Top Shaft)

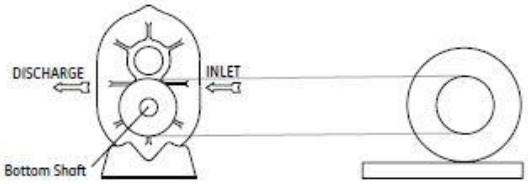

Motor On Inlet Side of Blower (Bottom Shaft)

Unacceptable

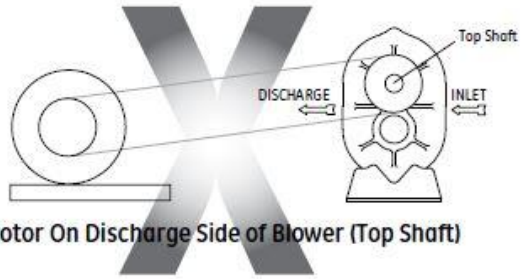

Motor On Discharge Side of Blower (Top Shaft)

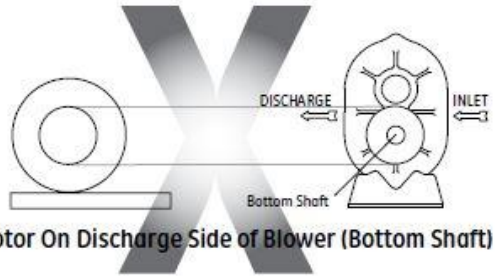

Motor On Discharge Side of Blower (Bottom Shaft)

Above are suggested locations for available accessories.

Figure 3a - Air Blower Installations with Accessories

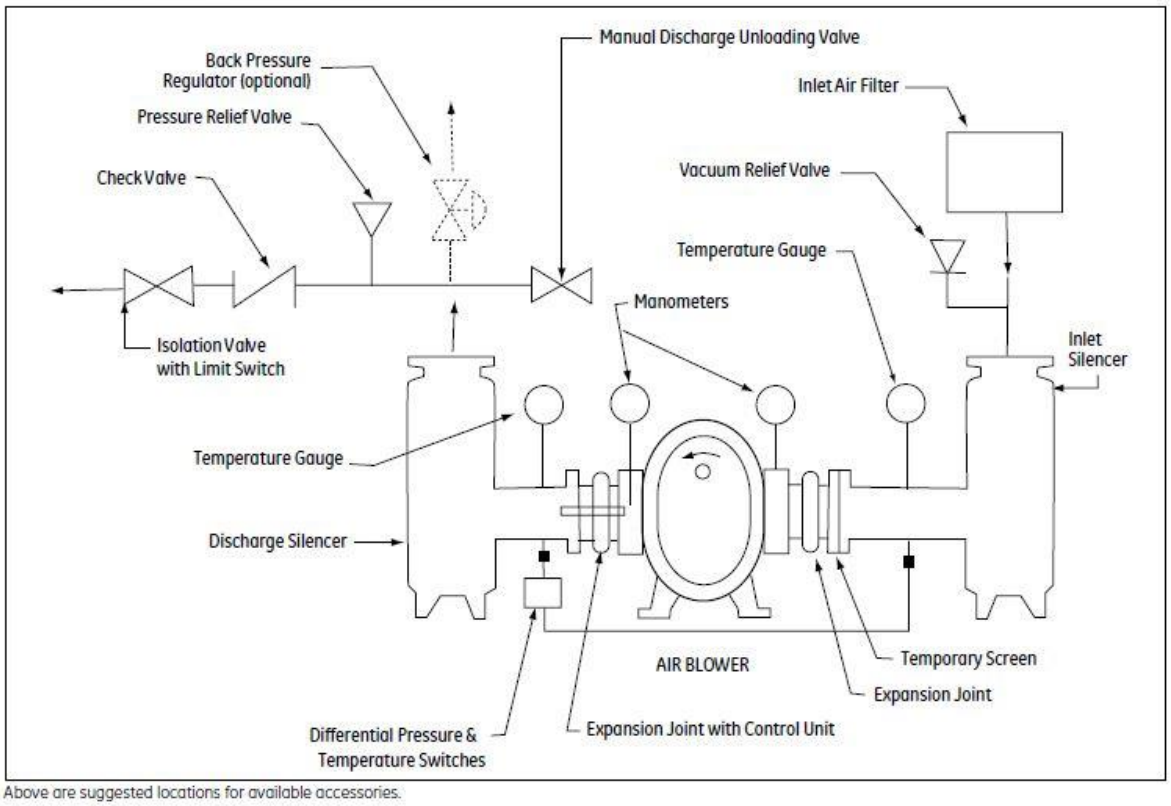

Above are suggested locations for available accessories.

Figure 3b - Gas Blower Installations with Accessories

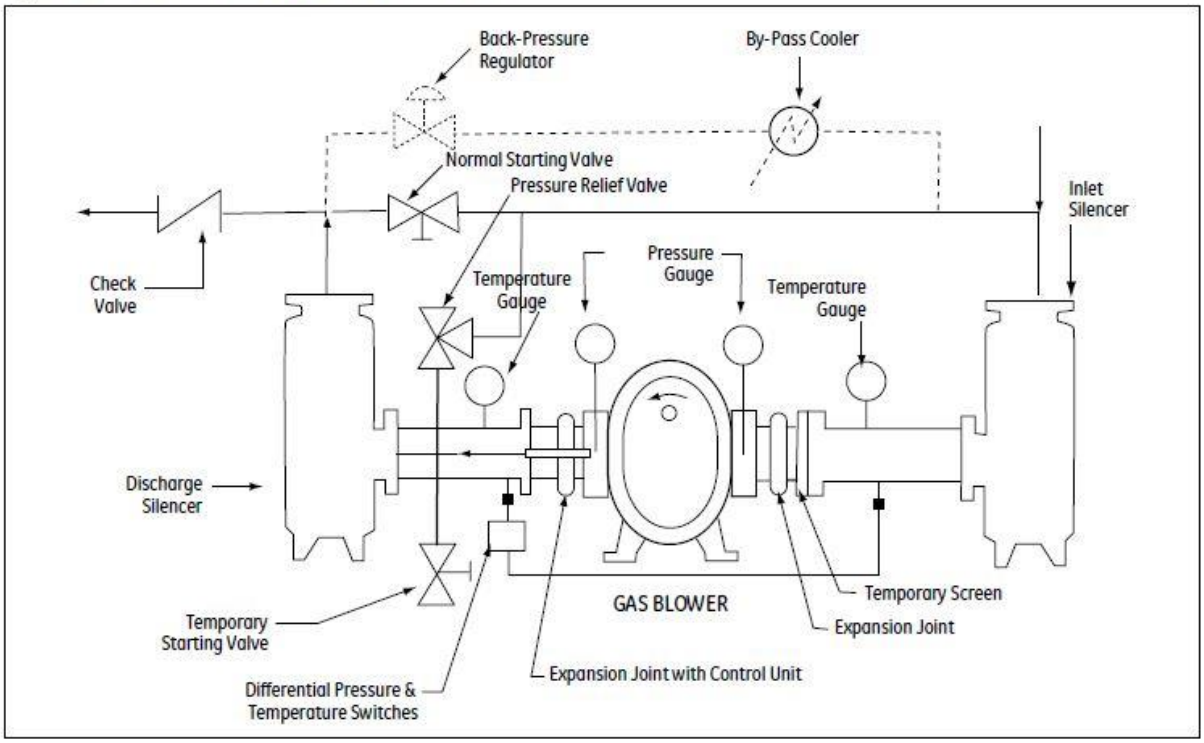

Figure 4 - Blower Orientation Conversion

Model	Reversible Rotation	WHISPAIR® Design
Roots Universal RAI	Yes	No
Roots URAI-JWHISPAIR	No	Yes
Roots URAI-G	Yes	No

Special Note: WHISPAIR models are designed to operate with only one shaft rotation direction to take full advantage of the WHISPAIR feature. Therefore, a WHISPAIR blower may be operated in the following combinations.

- CCW Rotation: Bottom Shaft; Right side discharge or a Left Shaft; Bottom discharge
- CCW Rotation: Top Shaft; Left side discharge or a Right Shaft; Top discharge

or

- CW Rotation: Bottom Shaft; Left side discharge or a Right Shaft Bottom discharge
- CW Rotation: Top Shaft; Right side discharge or a Left Shaft Top discharge

Blower Orientation and Lubrication Points: Grease Lubricated Drive End Roots Universal RAI series & URAI-G gas blowers

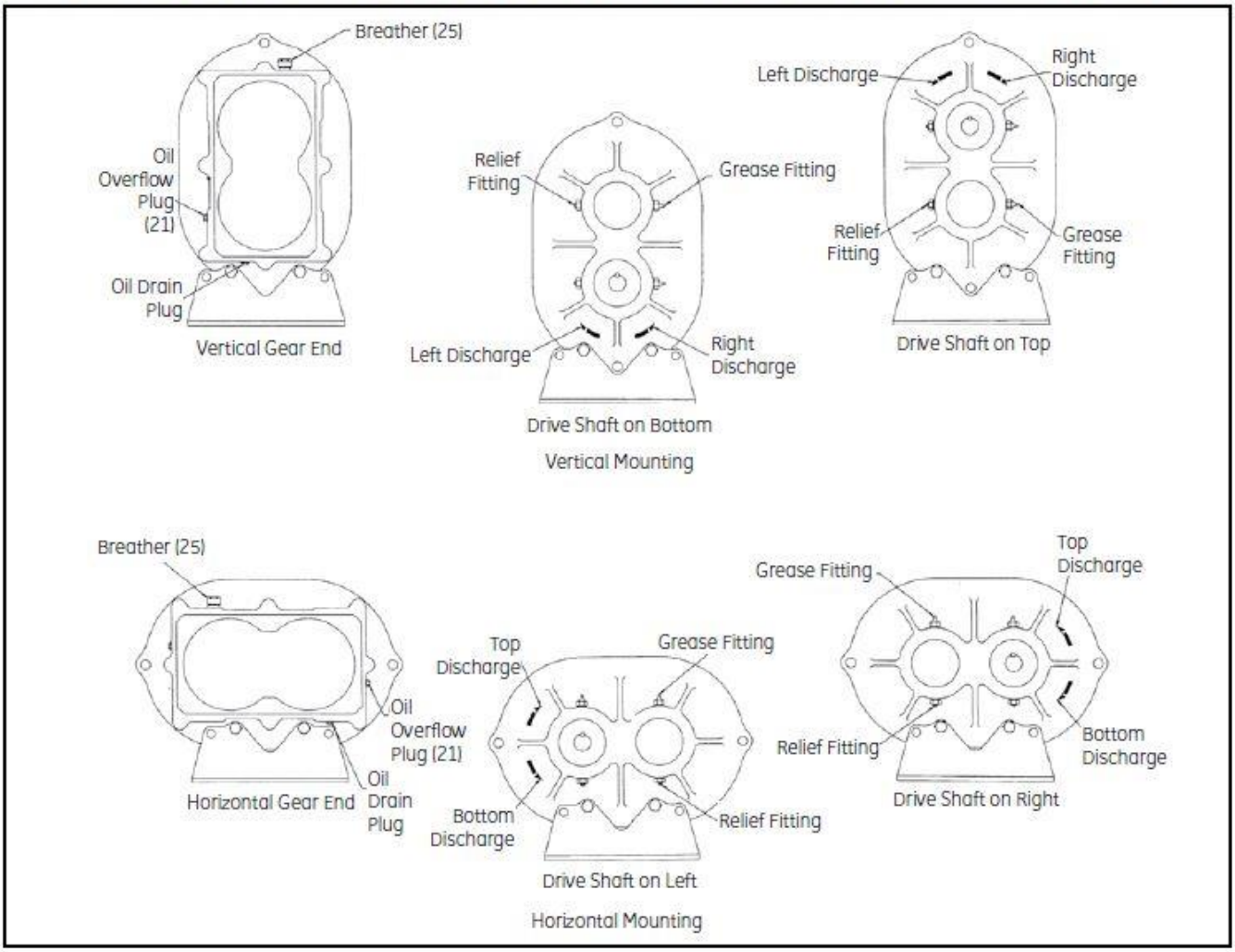

Drive End Breather Orientation for Roots Universal RAI Series - DSL with Oil Lube

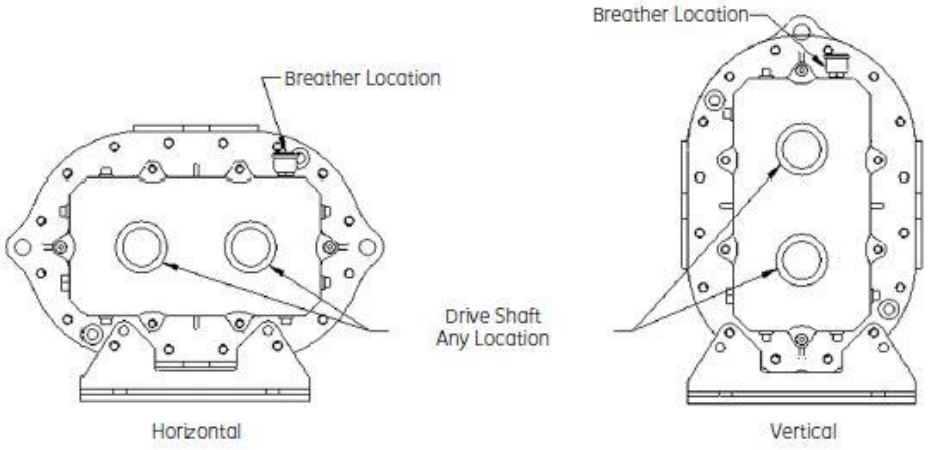

Universal RAI DSL Breather Orientation

Revised Date: 1/11/05

Table 1 - Universal RAI series, Universal RAI-DSL & URAI-G gas blower, Maximum Allowable operating Conditions

Frame Size	Gear Dia. (inch)	Speed RPM	Temperature Rise		Delta Pressure		Inlet Vacuum	
			F°	C°	PSI	mbar	INHG	mbar
22	2.5	5275	225	125	12	827	15	500
24	2.5	5275	210	117	7	483	15	500
32	3.5	3600	240	133	15	1034	16	539
33	3.5	3,600	225	125	12	827	15	500
36	3.5	3,600	225	125	7	483	15	500
42	4.0	3,600	240	133	15	1034	16	539
45	4.0	3600	225	125	10	690	16	539
47	4.0	3600	225	125	7	483	15	500
53	5.0	2850	225	125	15	1034	16	539
56	5.0	2850	225	125	13	896	16	539
59	5.0	2850	225	125	7	483	15	500
65	6.0	2350	250	130	15	1034	16	539
68	6.0	2350	240	133	14	965	16	539
615	6.0	2350	130	72	7	483	14	472
76	7.0	2050	250	139	15	1034	16	539
711	7.0	2050	225	125	10	690	16	539
718	7.0	2050	130	72	6	414	12	405

Table 2 - Recommended Oil Grades

Ambient† Temperature °F (°C)	ISO Viscosity No.
Above 90° (32°)	320
32° to 90° (0° to 32°)	220
0° to 32° (-18° to 0°)	150
Below 0° (-18°)	100

†Ambient temperature is defined as the temperature of the space in which the blower and drive are located.

Roots URAI Gas Blower Oil and Grease Specifications

The specified oil should be Roots Synthetic Oil P/N 813-106-xxx of the proper viscosity.

Table 3 - Approximate Oil Sump Capacities

These capacities are provided to assist in stocking the correct amount of oil. Exact sump capacities may differ slightly. See "Lubrication" section for proper filing instructions.

Roots Universal RAI, URAI-J, URAI-G

Model No./Drive shaft location	Gear End Approx. Oil Sump Capacities	
	Fl. Oz	Liters
22, 24 (left or right)	6.1	0.18
22, 24 (top or bottom)	3.4	0.1
32, 33, 36 (left or right)	10.5	0.31
32, 33, 36 (top or bottom)	8.5	0.25
42, 45, 47 (left or right)	14.5	0.43
42, 45, 47 (top or bottom)	12.7	0.37
53, 56, 59 (left or right)	27.6	0.82
53, 56, 59 (top or bottom)	16	0.47
65, 68, 615 (left or right)	52.1	1.54
65, 68, 615 (top or bottom)	28.3	0.84
76, 711, 718 (left or right)	59.5	1.76
76, 711, 718 (top or bottom)	32.3	0.96

See page 14 and 15 for illustration of vertical and horizontal configurations

Roots Universal RAI series -DSL Splash Lubricated Drive End
Note that the gear and sump capacity is provided on the adjacent table.

Model No./Drive shaft location	Drive End Capacity	
	Fl. Oz	Liters
32, 33, 36 (left or right)	6.5	0.19
32, 33, 36(top or bottom)	4	0.12
42, 45, 47 (left or right)	10.8	0.32
42, 45, 47 (top or bottom)	5.5	0.16
53, 56, 59 (left or right)	14.8	0.44
53, 56, 59(top or bottom)	7.5	0.22
65, 68, 615 (left or right)	31	0.91
65, 68, 615 (top or bottom)	16	0.47

Table 4 - Roots Universal RAI series with Grease Lubricated Drive End: Specified Bearing Greasing Intervals

Speed in RPM	Operating Hours Per Day		
	8	16	24
	Greasing Interval in Weeks		
750-1000	7	4	2
1000-1500	5	2	1
1500-2000	4	2	1
2000-2500	3	1	1
2500-3000	2	1	1
3000 and up	1	1	1

The specified grease for servicing drive end bearings of a gas blower, use a NLGI #2 premium grade aluminum complex* grease, GE P/N T20019001 with 300°F (149°C) service temperature and moisture resistance and good mechanical stability.

When servicing drive end bearings of non gas blower, use a NLGI #2 premium grade microgel grease with 250°F (121°C) service temperature and moisture resistance and good mechanical stability. GE specifies Shell Darina SD2 NLGI#2. Product Code 5067628.

NOTE: Lithium based greases are not compatible with the Roots Synthetic Grease used when assembling a gas blower or the non-soap base grease used when assembling a standard Roots URAI blower. Lithium based grease is not approved for any Roots blowers.

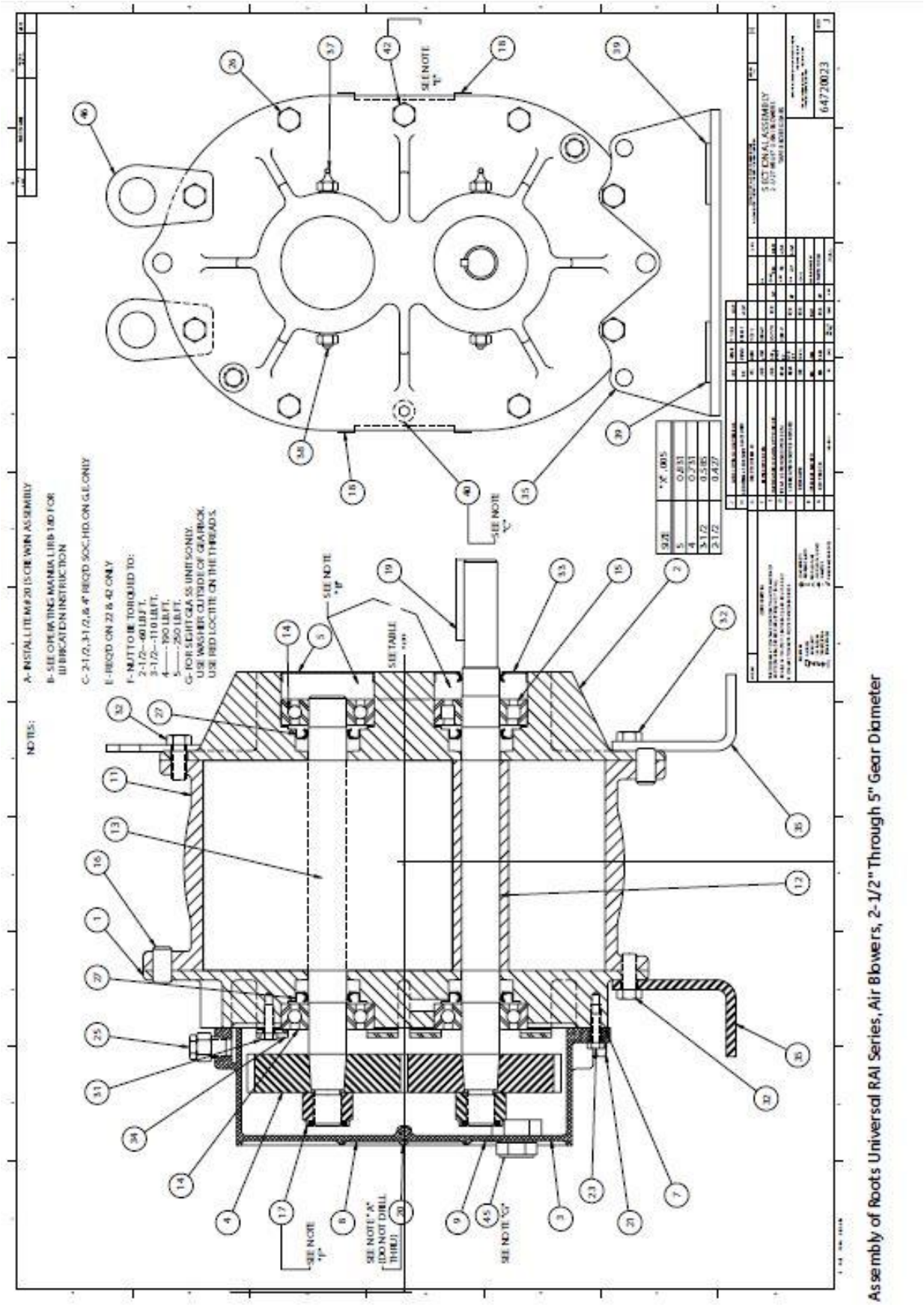

Assembly of Roots Universal RAI Series, Air Blowers, 2-1/2" Through 5" Gear Diameter

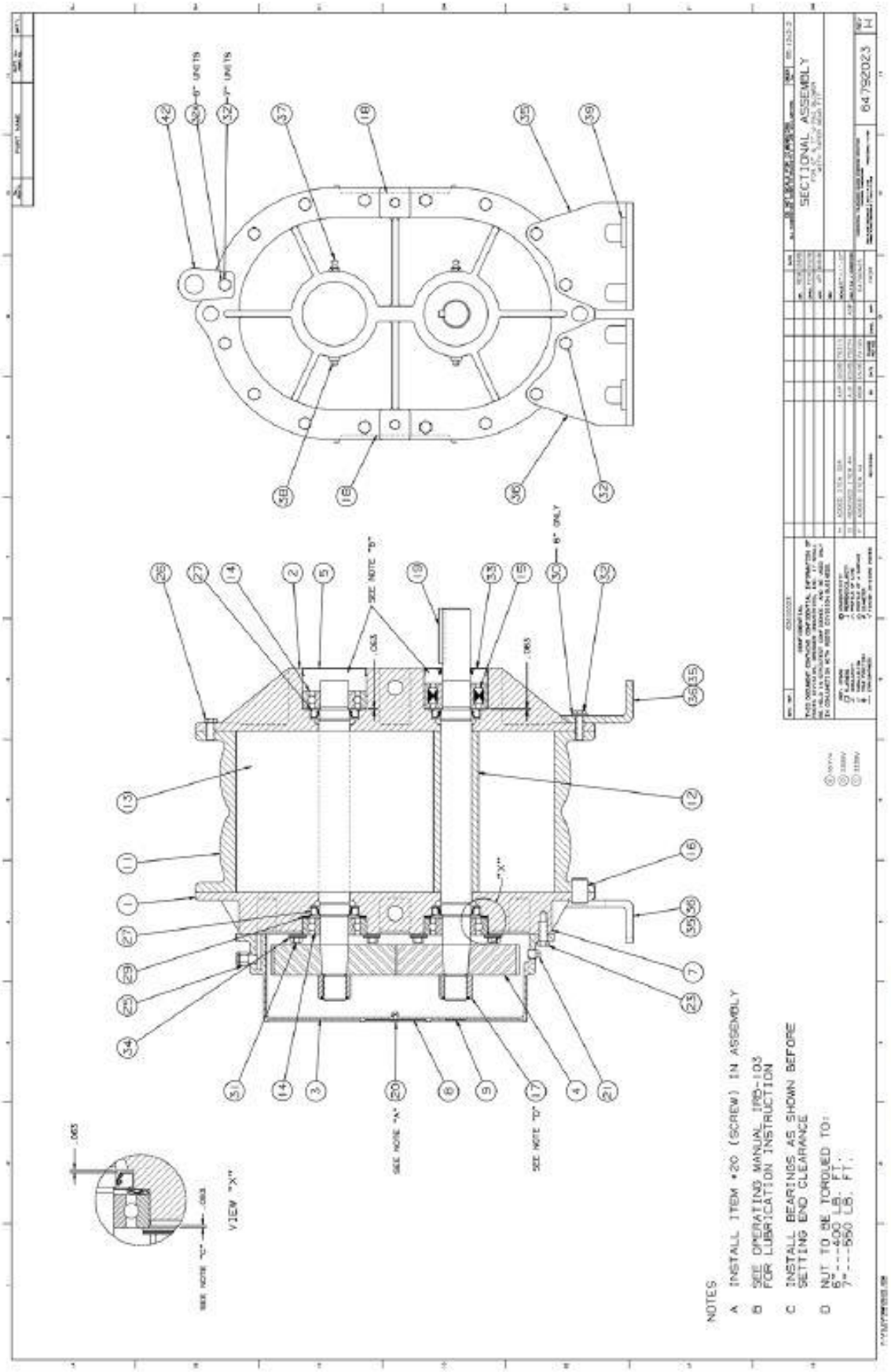

Assembly of Roots Universal RAI Blowers, 6" and 7" Diameter

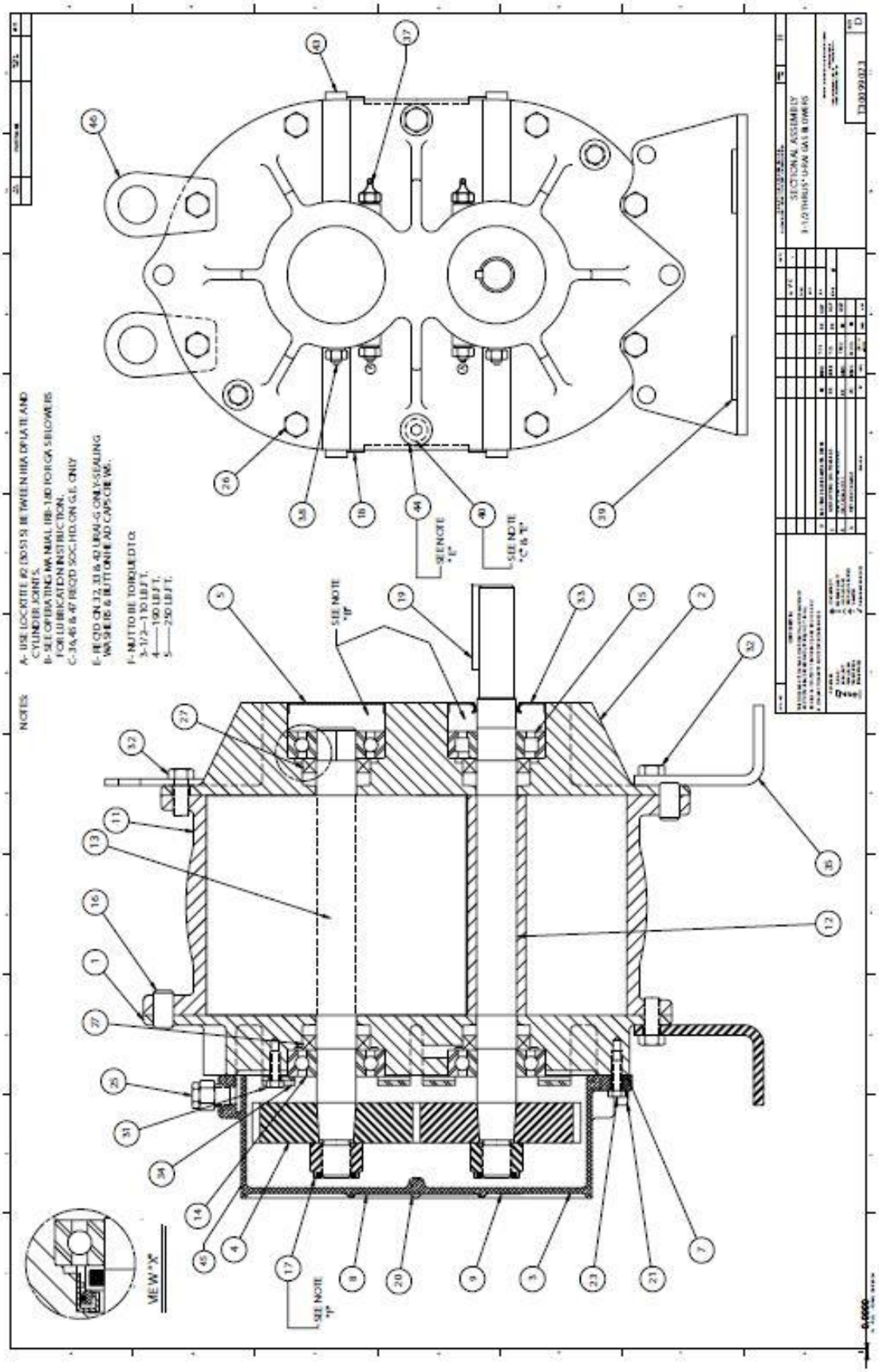

Assembly of Roots Universal RAI-G Series Gas Blowers, 3-1/2" through 5" Gear Diameter

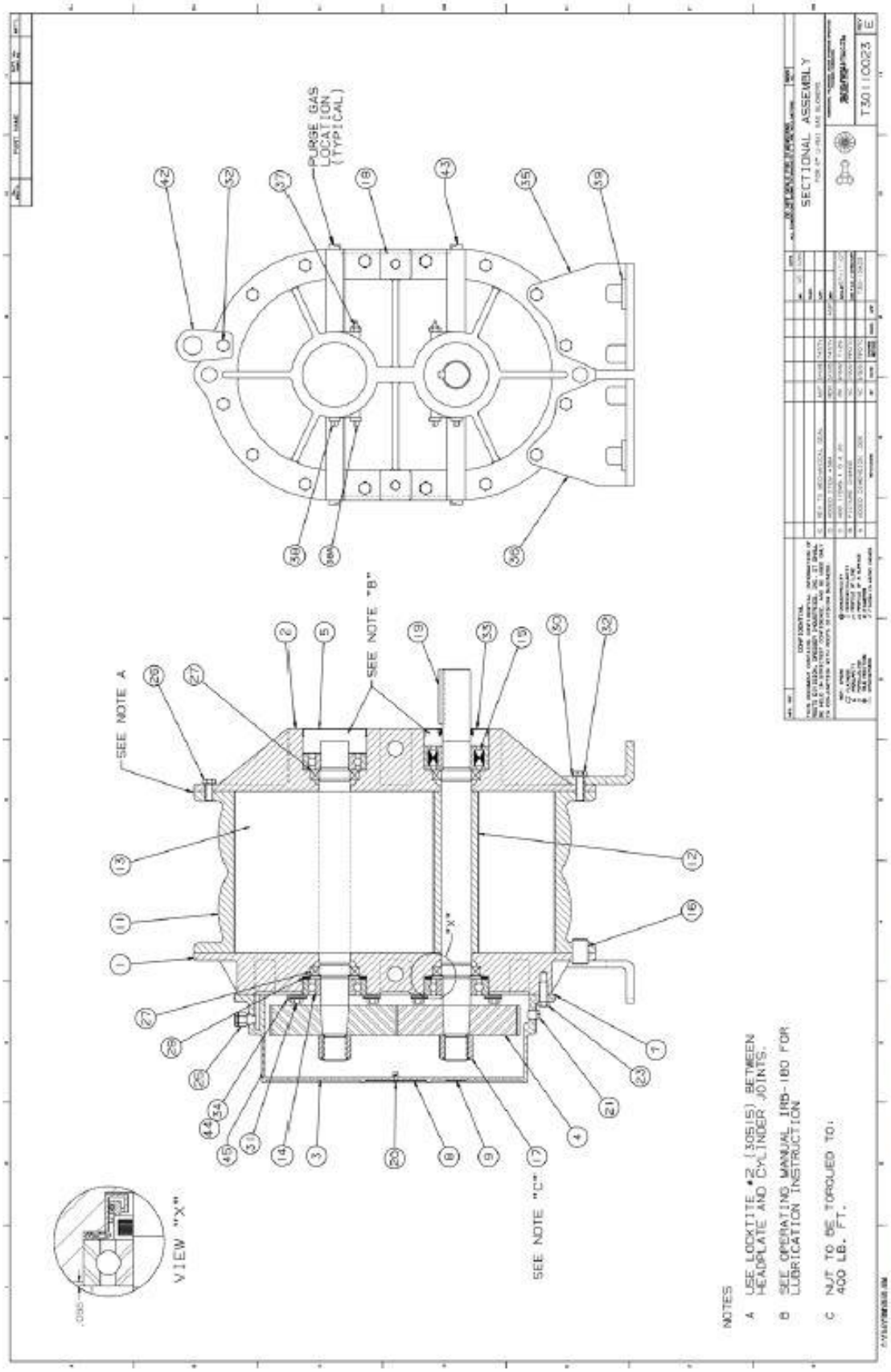

Assembly of Roots Universal RAI Series Gas Blowers, 6" Gear Diameter

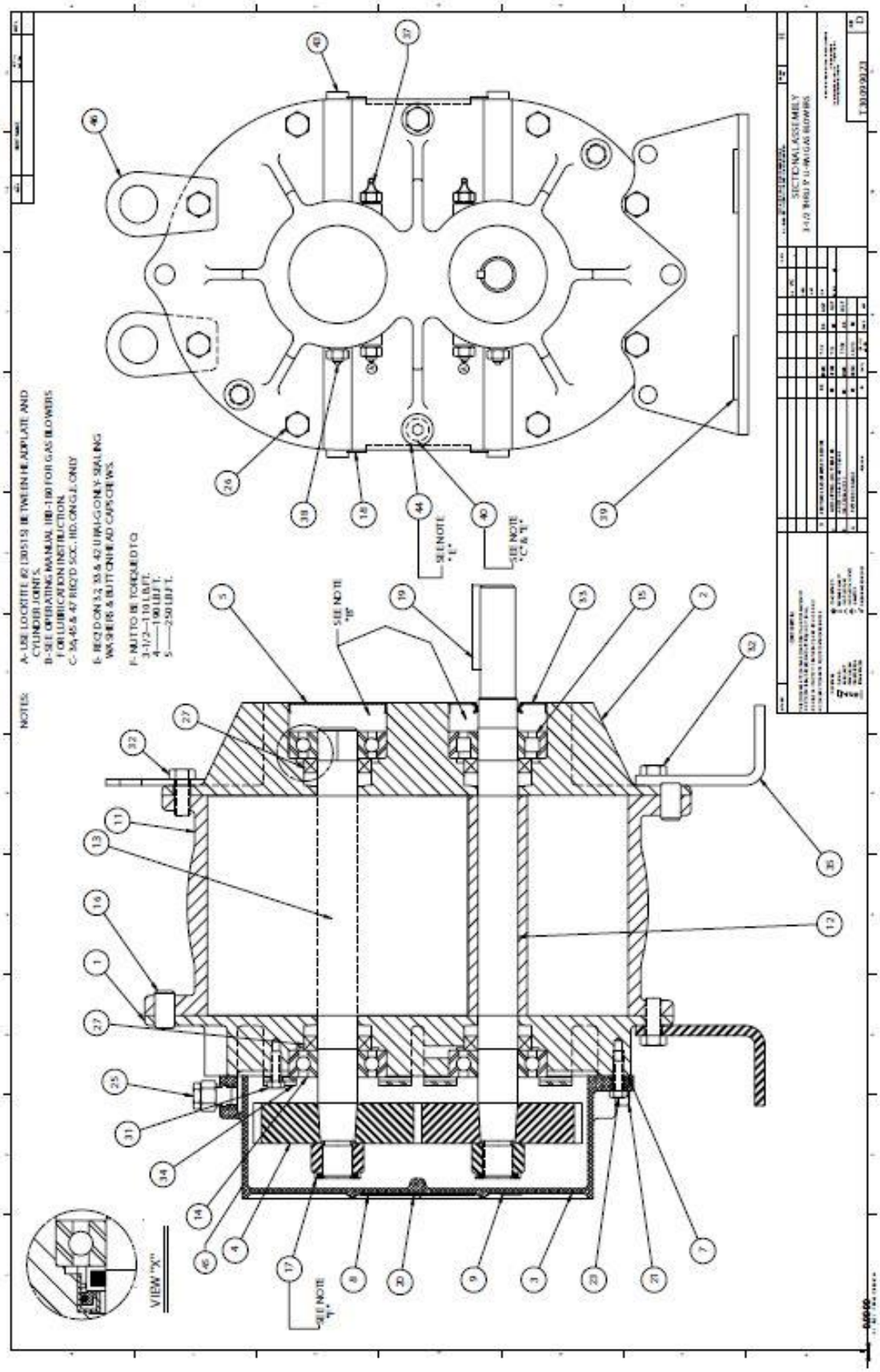

Assembly of Roots Universal RAI-G Series Gas Blowers, 3-1/2" through 5" Gear Diameter

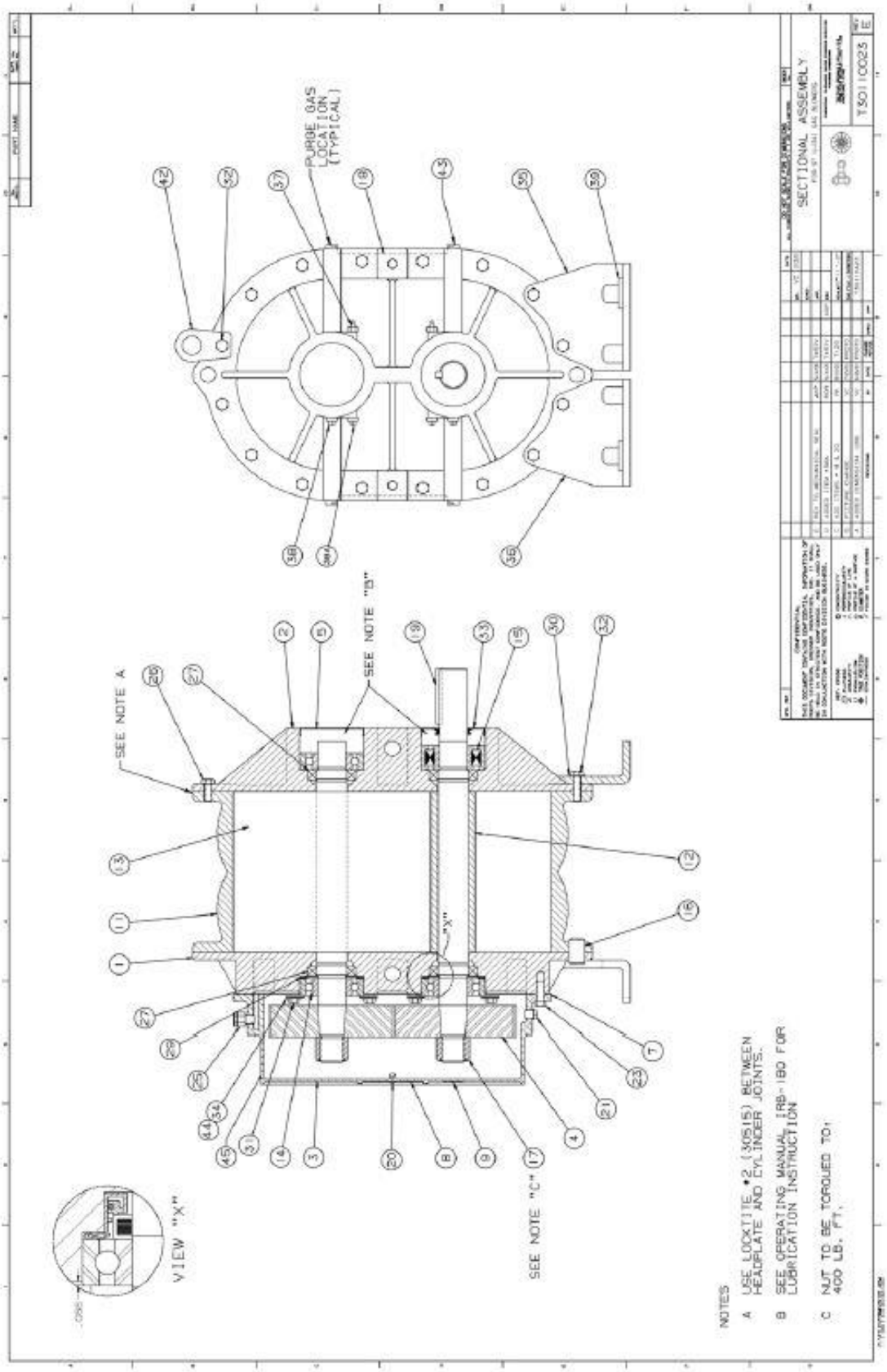

Assembly of Roots Universal RAI Series Gas Blowers, 6" Gear Diameter

Roots Universal RAI Series Blowers Parts List 2-1/2" – 5" Gear Diameter
(Refer to drawing #64720023)

Item #	Part Name	Qty.
1	Headplate Gear End	1
2	Headplate Drive End	1
3	Gearbox	1
4	Timing Gears	2
5	Cover-Blind (Plug Opening)	1
7	Gasket, Gear Box	1
11	Cylinder	1
12	Impeller & Shaft Drive	1
13	Impeller & Shaft Driven	1
14	Bearing, Ball	3
15	Bearing, Roller	1
16	Pin, Dowel	4
17	Gear Nut	2
19	Key	1
21	Plug, Pipe	3
23	Screw Hex	6
25	Breather (Plug Vent)	1
26	Screw, Hex	†
27	Seal, Lip Bearing	4
31	Screw, Hex, Nylock	4
32	Screw, Hex	6
33	Seal Lip-Drive	1
34	Clamp Plate	2
35	Foot	2
37	Fitting, Grease	2
38	Fitting, Relief	2
39	Washer Mounting	4
40	Screw Socket	2
42	Screw Hex	2

†Quantities vary by blower.

Roots Universal RAI Series Blowers Parts List 6" & 7" Gear Diameter
(Refer to drawing #64792023)

Item #	Part Name	Qty.
1	Headplate Gear End	1
2	Headplate Drive End	1
3	Gearbox	1
4	Timing Gears	2
5	Cover-Blind (Plug Opening)	1
7	Gasket, Gear Box	1
11	Cylinder	1
12	Impeller & Shaft Drive	1
13	Impeller & Shaft Driven	1
14	Bearing, Ball	3
15	Bearing, Roller	1
16	Pin, Dowel	4
17	Gear Nut	2
19	Key	1
21	Plug, Pipe	3
23	Screw Hex Nylock	8
25	Breather (Plug Vent)	1
26	Screw, Hex	†
27	Seal, Lip Bearing	4
29	Washer, Spring Wavy	2
31	Screw, Hex, Nylock	4
32	Screw, Hex	10
33	Seal Lip-Drive	1
34	Clamp Plate	2
35	Foot	2
37	Fitting, Grease	2
38	Fitting, Relief	2
39	Washer Mounting	4

†Quantities vary by blower.

Roots Universal RAI-DSL Series Blowers Parts List 3-1/2" – 5" Gear Diameter
(Refer to drawing #T30356023)

Item #	Part Name	Qty.
1	Headplate Gear End	1
2	Headplate Drive End	1
3	Gearbox	1
4	Timing Gears	2
7	Gasket, Gear Box, DE Cover	1
11	Cylinder	1
12	Impeller & Shaft Drive	1
13	Impeller & Shaft Driven	1
14	Bearing, Ball	3
15	Bearing, Roller	1
16	Pin, Dowel	4
17	Gear Nut	2
19	Key	1
21	Plug, Pipe	3
23	Screw Hex	6
25	Breather (Plug Vent)	1
26	Screw, Hex	†
27	Seal, Lip Bearing	4
31	Screw, Hex, Nylock	4
32	Screw, Hex	6
33	Seal Lip-Drive	1
34	Clamp Plate	2
35	Foot	2
39	Washer Mounting	4
40	Screw Socket	2
42	Screw Hex	2
48	DE Oil Slinger Set Screw	4
50	Drive End Cover	1
52	Drive End Oil Slinger	2
53	Oil Sight Glass	2

†Quantities vary by blower.

Roots Universal RAI DSL Series Blowers Parts List 6" Gear Diameter
(Refer to drawing #T30382023)

Item #	Part Name	Qty.
1	Headplate Gear End	1
2	Headplate Drive End	1
3	Gearbox	1
4	Timing Gears	2
7	Gasket, Gear Box	1
11	Cylinder	1
12	Impeller & Shaft Drive	1
13	Impeller & Shaft Driven	1
14	Bearing, Ball	3
15	Bearing, Roller	1
16	Pin, Dowel	4
17	Gear Nut	2
19	Key	1
21	Plug, Pipe	3

Item #	Part Name	Qty.
23	Screw Hex Nylock	8
25	Breather (Plug Vent)	1
26	Screw, Hex	†
27	Seal, Lip Bearing	4
31	Screw, Hex, Nylock	4
32	Screw, Hex	10
33	Seal Lip-Drive	1
34	Clamp Plate	2
35	Foot	2
39	Washer Mounting	4
48	DE Oil Slinger Set Screw	4
50	Drive End Cover	1
52	Drive End Oil Slinger	2
53	Oil Sight Glass	2

†Quantities vary by blower.

Roots Universal RAI Series Gas Blowers Parts List
3-1/2" & 5" Gear Diameter
(Refer to drawing #T30099023)

Item Number	Part Name	Quantity
1	Headplate Gear End	1
2	Headplate Drive End	1
3	Gearbox	1
4	Timing Gears	2
5	Cover-Blind (Plug Opening)	1
7	Gasket, Gear Box	1
11	Cylinder	1
12	Impeller & Shaft Drive	1
13	Impeller & Shaft Driven	1
14	Bearing, Ball	3
15	Bearing, Roller	1
16	Pin, Dowel	4
17	Gear Nut	2
19	Key	1
21	Plug, Pipe	3
23	Screw Hex	8
25	Breather (Plug Vent)	1
26	Screw, Hex	14†
27	Seal, Bearing	4
31	Screw, Hex	4
32	Screw, Hex	4
33	Seal Lip-Drive	1
34	Clamp Plate	2
35	Foot	2
37	Fitting, Grease	2
38	Fitting, Relief	2
39	Washer Mounting	4
40	Screw Socket	2
42	Screw Hex	2

†Quantity varies by blower.

Specified Lubricants

Roots Synthetic Oil: ISO-VG-220 Grade	
	Part Number
Quart	813-106-001
Gallon	813-106-002
Case (12 qts)	813-106-008

Roots Synthetic Oil: ISO-VG-320 Grade	
	Part Number
Quart	813-106-004
Gallon	813-106-005
Case (12 qts)	813-106-007

Roots Synthetic Grease: NLGI #2	
	Part Number
14.5 oz. Tube	T200019-001
5 Gallon Pail	T200019-003
Case (30 tubes)	T200019-002

Roots Universal RAI Series Gas Blowers Parts List
6" Gear Diameter
(Refer to drawing #T3011023)

Item Number	Part Name	Quantity
1	Headplate Gear End	1
2	Headplate Drive End	1
3	Gearbox	1
4	Timing Gears	2
5	Cover-Blind (Plug Opening)	1
7	Gasket, Gear Box	1
7†	Gasket DE Cover	1
11	Cylinder	1
12	Impeller & Shaft Drive	1
13	Impeller & Shaft Driven	1
14	Bearing, Ball	3
15	Bearing, Roller	1
16	Pin, Dowel	4
17	Gear Nut	2
19	Key	1
21	Plug, Pipe	3
23	Screw Hex Nylock	8
25	Breather (Plug Vent)	1
26	Screw, Hex	14††
27	Seal, Bearing	4
31	Screw, Hex	4
32	Screw, Hex	10
33	Seal Lip-Drive	1
34	Clamp Plate	2
35	Foot	2
37	Fitting, Grease	2
38	Fitting, Relief	2
39	Washer Mounting	4
40	Screw Socket	2
42	Screw Hex	2
43	Plug	8
51	Shoulder Bolt	2
53	Oil Sight Glass	2

†DE cover gasket is not the same as the gasket used on the GE model. You must specify the gasket required when ordering.
††Quantities vary by blower.

Basic Connection & Drive Shaft Information

Roots Universal RAI (URAI) Air Blowers with Grease Lubricated Drive End

BOM#*	Frame Size	Inlet/Disch Connection	Shaft Diameter (in.)	Bare Weight
65102020	22	1" NPT	0.625	32
65103020	24	2" NPT	0.625	43
71048020	32	1.25" NPT	0.750	69
65105020	33	2" NPT	0.750	74
65106020	36	2.5" NPT	0.750	102
65108020	42	1.5" NPT	0.875	88
65109020	45	2.5" NPT	0.875	109
65110020	47	3" NPT	0.875	128
65112020	53	2.5" NPT	1.125	143
65113020	56	4" NPT	1.125	170
65114020	59	4" NPT	1.125	204
65116020	65	3" NPT	1.375	245
65117020	68	5" NPT	1.375	285
65118020	615	6" Flange	1.375	425
65120020	76	4" NPT	1.562	400
65121020	711	6" Flange	1.562	530
65122020	718	8" Flange	1.562	650

Refer to Specification Sheet S-12K84

Roots URAI DSL Air Blowers with Dual Splash Lubrication

BOM#*	Frame Size	Inlet/Disch Connection	Shaft Diameter (in.)	Bare Weight
T30378020	32	1.25" NPT	0.750	72
T30379020	33	2" NPT	0.750	77
T30380020	36	2.5" NPT	0.750	105
T30352020	42	1.5" NPT	0.875	92
T30353020	45	2.5" NPT	0.875	113
T30354020	47	3" NPT	0.875	132
T30359020	53	2.5" NPT	1.125	148
T30360020	56	4" NPT	1.125	175
T30361020	59	4" NPT	1.125	209
T30384020	65	3" NPT	1.375	250
T30385020	68	5" NPT	1.375	290
T30386020	615	6" Flange	1.375	430

Refer to Specification Sheet S-27S03

Roots Universal RAI air blowers include detachable mounting feet which permit vertical or horizontal installation. The units are center timed for rotation in either direction. The bearings on the URAI are grease lubricated on the drive end and splash lubricated on the gear end. The URAI-DSL is splash lubricated on BOTH ends.

Roots Universal RAI-G Gas Blowers with Grease Lubricated Drive End

BOM#*	Frame Size	Inlet/Disch Connection	Shaft Diameter (in.)	Bare Weight
710480G0	32	1.25" NPT	0.750	69
651050G0	33	2" NPT	0.750	74
651060G0	36	2.5" NPT	0.750	102
651080G0	42	1.5" NPT	0.875	88
651090G0	45	2.5" NPT	0.875	109
651100G0	47	3" NPT	0.875	128
651120G0	53	2.5" NPT	1.125	143
651130G0	56	4" NPT	1.125	170
651140G0	59	4" NPT	1.125	204
651160G0	65	3" NPT	1.375	245
651170G0	68	5" NPT	1.375	285
651180G0	615	6" NPT	1.375	425

Refer to Specification Sheet S-60A01

Roots Universal RAI-G gas blowers include detachable mounting feet which permit vertical or horizontal installation. **Feet are different for vertical and horizontal mounting.** The units are center timed for rotation in either direction. The bearings on the Universal RAI-G are grease lubricated on the drive end and splash lubricated on the gear end. Roots Synthetic Lubricant is recommended.

Basic Connections and Drive Shaft Information

Roots Universal RAI (URAI-J) WHISPAIR Air Blowers

Roots Universal RAI-J WHISPAIR Air Blowers with Grease Lubricated Drive End

BOM#*	Frame Size	Inlet/Disch Connection	Shaft Diameter (in.)	Bare Weight
74065020	33J	2" NPT	0.750	84
74086020	36J	2.5" NPT	0.750	112
74066020	45J	2.5" NPT	0.875	119
74087020	47J	3" NPT	0.875	138
74067020	56J	4" NPT	1.125	180

Refer to Specification Sheet S-33A93

Roots URAI-J-DSL WHISPAIR Air Blowers with Dual Splash Lubrication

BOM#*	Frame Size	Inlet/Disch Connection	Shaft Diameter (in.)	Bare Weight
T30417020	33J	2" NPT	0.750	87
T30418020	36J	2.5" NPT	0.750	115
T30410020	45J	2.5" NPT	0.875	122
T30412020	47J	3" NPT	0.875	141
T30415020	56J	4" NPT	1.125	185

Refer to Specification Sheet S-33A93

Roots URAI-J Metric WHISPAIR Air Blowers with Grease Lubricated Drive End

BOM#*	Frame Size	Inlet/Disch Connection	Shaft Diameter (mm)	Bare Weight
TBD	33J	2" BSP	19	84
740860M0	36J	2.5" BSP	19	112
TBD	45J	2.5" BSP	24	119
TBD	47J	3" BSP	24	138
TBD	56J	4" BSP	28	180

Roots URAI-J-DSL Metric WHISPAIR Air Blowers with Dual Splash Lubrication

BOM#*	Frame Size	Inlet/Disch Connection	Shaft Diameter (mm)	Bare Weight
TBD	33J	2" BSP	19	87
T304660M0	36J	2.5" BSP	19	115
TBD	45J	2.5" BSP	24	122
T304550M0	47J	3" BSP	24	141
TBD	56J	4" BSP	28	185

Roots Universal RAI-J air blowers incorporate the patented WHISPAIR® design in addition to the same features as the original URAI blowers. Roots URAI-J's are centered timed, however the WHISPAIR benefits can only be realized when the jet is located in the discharge position.

Basic Connections and Drive Shaft Information

Roots Universal RAI Metric (URAI-M) Air Blowers with Grease Lubricated Drive End
NOTE: Metric URAI product has metric shaft diameter and connection sizes.

BOM#*	Frame Size	Inlet/Disch Connection	Shaft Diameter (mm)	Bare Weight
651020M0	22	1" BSP	16	32
651030M0	24	2" BSP	16	43
710480M0	32	1.25" BSP	19	69
651050M0	33	2" BSP	19	74
651060M0	36	2.5" BSP	19	102
651080M0	42	1.5" BSP	24	88
651090M0	45	2.5" BSP	24	109
651100M0	47	3" BSP	24	128
651120M0	53	2.5" BSP	28	143
651130M0	56	4" BSP	28	170
651140M0	59	4" BSP	28	204
T30392060	65	3" BSP	32	245
T30394060	68	5" BSP	32	285
T30390060	615	150 NP10	32	425
T30396060	76	4" BSP	38	400
T30398060	711	150 NP10	38	530
T30340060	718	200 NP10	38	650

Roots URAI-DSL Metric Air Blowers with Dual Splash Lubrication

BOM#*	Frame Size	Inlet/Disch Connection	Shaft Diameter (mm)	Bare Weight
T30463060	32	1.25" BSP	19	72
T30464060	33	2" BSP	19	77
T30465060	36	2.5" BSP	19	105
T30451060	42	1.5" BSP	24	92
T30452060	45	2.5" BSP	24	113
T30453060	47	3" BSP	24	132
T30459060	53	2.5" BSP	28	148
T30460060	56	4" BSP	28	175
T30461060	59	4" BSP	28	209
T30467260	65	3" BSP	32	250
T30467360	68	5" BSP	32	290
T30467460	615	150 NP 10	32	430

Roots Universal RAI air blowers include detachable mounting feet which permit vertical or horizontal installation. The units are center timed for rotation in either direction. The bearings on the URAI are grease lubricated on the drive end and splash lubricated on the gear end. The Roots URAI-DSL is splash lubricated on BOTH ends.